PART No: 10-700-XX	FILE: spec10-700xxD.t4g	APP. SUPPLIER:

MATERIAL:

OUTLINE DIMENSIONS

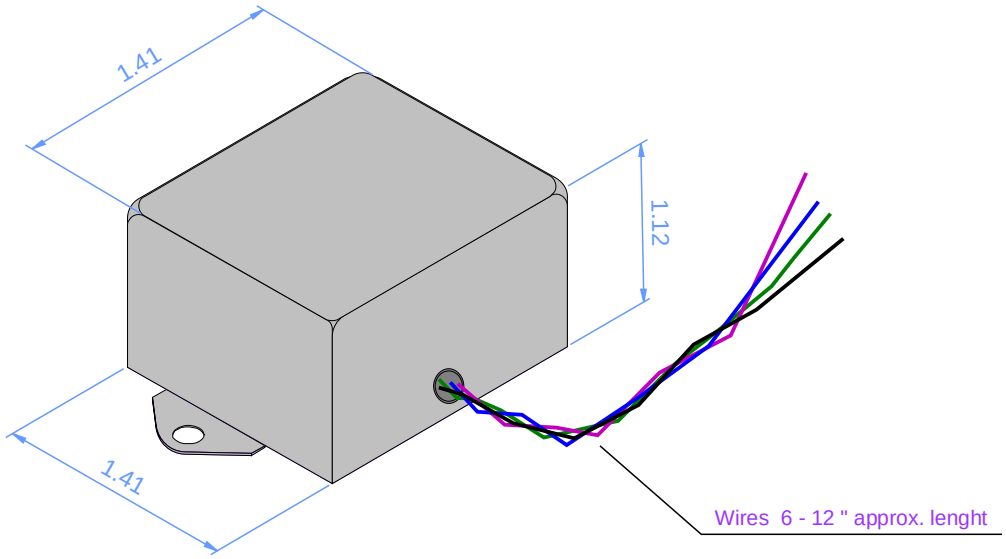

CONNECTION DIAGRM

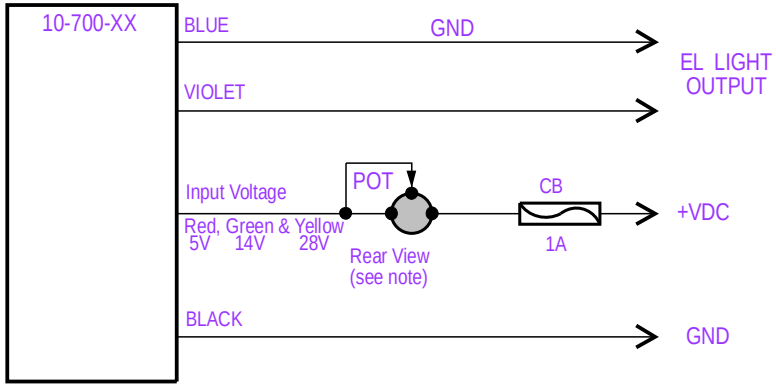

ELECTRICAL SPECIFICATIONS:

PN:	Input Voltage:	Wire color:
10-700-05	0 - 5 VDC	Red
10-700-14	0 - 16 VDC	Green
10-700-28	0 - 30 VDC	Yellow

Current draw empty: 50mA (without lights)
Input Current: 85 - 120 mA DC
Output Current: 10 - 20 mA AC
Output Voltage: 80 - 130 Vrms
Output Frequency: 800 - 2500 Hz
Nominal Load: 27 sq.in. UMA Electro Luminescence Material
(up to 12 UMA bezels and/or internally lit instruments,
1 large light strip-1.25"x18", or 2 small light strips 1.25"x9")

Mounting Info: (2) .150 dia. holes @ 1.75" spacing.
Attach Inverter to metal surface, for heat sink.

NOTES:

DO NOT GROUND output wires.

Twist output pair of wires (Violet&Blue) when connecting EL lights together.

Add Dimmer Potentiometer (UMA# 1G01) 1K 5W, connect as shown for clockwise rotation to increase brightness.

Add 1 amp circuit breaker Potter and Brumfield PN: W23X1A1G1 or equivalent .

Specification Drawing

Weight:		3.0 oz.			
2012001	D	Output wire color change	ShM	2/27/12	
02-0076	C	Revised specifications	JM	9/19/02	
99-0008	B	changed to 1 A circuit breaker.	CBH	10/28/99	CFH
99-0002	A	added part number 1G01.	CBH	9/02/99	CFH
ECO	REV	DESCRIPTION	DR	DATE	APP

TOLERANCES EXCEPT AS NOTED

.XX
.XXX

ANGULAR

UMA Inc, 260 Main St. Dayton, VA 22821

SCALE N/A	DATE: 2/12/99	SHEET 1 of 1	
SUPPLIER COMPLETE ☐	DRAW BY CBH		
DESCRIPTION	EL VOLTAGE INVERTER		
APP	PART# 10-700-XX	REV D	