Lone Star Aviation, Corp.
604 S. Wisteria Street
Mansfield, Texas 76063
682-518-8882 ph.
682-518-8831 fax
www.lonestaraviation.com

Continued Air Worthiness: Annual

Visual inspection for the following:

1. Hardware: Check for loose hardware
2. Connector: Check connector wiring and thumbscrew tighness

Damaged Equipment Procedure:

If equipment fails to function to specifications, call the factory for technical support.

REVISION BLOCK

REV	ECN #	ZONE	DESCRIPTION OF CHANGE(s)	DATE	APPROVED
REV-0	N/A	N/A	Initial Release	5-21-13	JRM
REV-A	N/A	N/A	Drawing Update	7-29-15	JRM

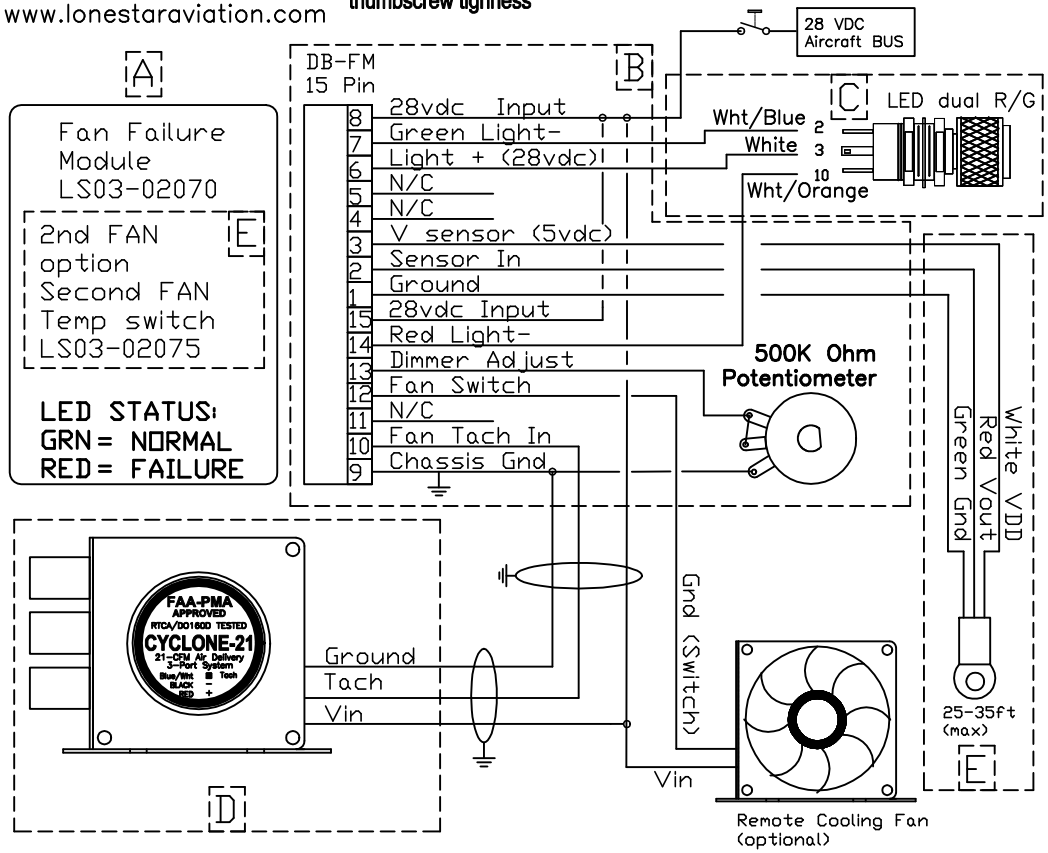

A Fan Failure Module: (LS03-02070)

Input Voltage:	12-36 vdc
Tach Input:	5 Volt TTL
Physical Dimensions:	2.13 x 1.60 x .935
Weight:	66 grams
Maximum Operational Temp:	+55C (+131F)
Minimum Operational Temp:	- 40C (-40F)
Maximum Altitude:	30,000 Feet
Vibration:	Section 8, Cat S, Test Curve M
Testing: (Pending)	RTCA, DO160-F

B Connector Kit: (LS03-03020)

Connector:	DB15 female, 15 pin
Potentiometer:	500k Ohm

C LED Dual Color R/G: (LS03-07109)

Input Voltage:	12-28 vdc
Dual Color Current:	20mA
Red:	660nm
Green:	525nm
Panel Cut out:	0.468"

D

Cyclone 21 Fan 12v	Cyclone 21 Fan 24v
1. CRB6457	1. CRB122253
1a.CRB TACH	1a.CRB TACH

E Options:

Remote Switch: (LS03-02075)

PCB Board - 2nd Fan

Temperature Sensor: (LS03-02150)

Temp Switch Point (ON):	85°F-90°F (adj)
Temp Switch Point (OFF):	75°F-80°F (adj)
Harness Length:	35ft (max)

Connection:

The Thermal Sensor should be wired to the 15 pin connector via a cable that shields the Ground pin. Balanced Microphone line is recomended.

Operating Instructions:

This circuit is designed to monitor the tach output of a dc fan motor and provide a failure status via the panel mounted Red/Green LED indicator.

The FFW has an optional circuit for a thermal sensor to monitor the temperature of remote electronics in an avionics bay or entertainment cabinet. The circuit will automatically turn on a remote fan to cool a specific device or A/C electronics

Mounting Limitations:

Mount the Fan Failure Warning System enclosure on a metal surface near on board avionics equipment or electronics needing airflow from fans.

Dimmer Adjustment:

The LED can be dimmed by either using a potentiometer, or by using an outside dimmer to supply a voltage to the dimmer adjust pin. The voltage must not be less than 0.5 VDC or be higher than 4.75 VDC.

Reference:

Refer to FAA AC 43.13 Acceptable Methods, Techniques, and Practices Aircraft Alteratioins when installing the Fan Failure Warning System.

LS03-02071 Fan Failure Warning System: 12 volt

LS03-02070	Fan Failure Module
LS03-03020	Connector kit
LS03-07109	LED, dual R/G, 14/28
CRB-6457	Fan, 12 volt, 3-wire
CRB-TACH	3rd wire: Tach

LS03-02072 Fan Failure Warning System: 24 volt

LS03-02070	Fan Failure Module
LS03-03020	Connector kit
LS03-07109	LED, dual R/G, 14/28
CRB-122253	Fan, 24 volt, 3-wire
CRB-TACH	3rd wire: Tach

Options: Remote on/off (second fan)

LS03-02075	Remote Temperature Switch
LS03-02150	Temperature Sensor

Tools:

601966-1	TE Connectivity Crimper Tool (M22520/201)
601966-5	TE Connectivity Crimper Positioner Mil-109
91067-2	TE Connectivity Insert / Extract Tool

Recomended Wire Sizes

Pin	Description:	Wire AWG:
1	Ground	#20 AWG
2	Sensor In	#22 AWG
3	V Sensor (5vdc)	#22 AWG
6	Light + (28vdc)	#22 AWG
7	Green Light -	#22 AWG
8	Input 28 VDC	#20 AWG
9	Chassis Ground	#20 AWG
10	Fan Tach In	#22 AWG
12	Fan Switch	#22 AWG
13	Dimmer Adjust	#22 AWG
14	Red Light -	#22 AWG
15	28 VDC	#20 AWG

ITEM #	QTY.	PART NO.	DESCRIPTION

UNLESS NOTED OTHERWISE
TOLERANCE BLOCK:
DIMENSIONS ARE IN INCHES
DECIMALS ±1° ANGULAR
XX ± .030
XXX ± .015
XXXX ± .0005
DO NOT SCALE DRAWING

PROPRIETARY
THIS DOCUMENT AND THE DATA DISCLOSED HEREWITH IS NOT TO BE REPRODUCED, USED, OR DISCLOSED IN WHOLE OR IN PART TO ANYONE WITHOUT WRITTEN AUTHORIZATION FROM LONE STAR AVIATION, INC

APPROVALS	DATE
DRAWN BY L DAVIS	5-21-13
APPROVED BY JRM	5-21-13

MATERIAL
FINISH
NOTE:
NEXT ASSY.

LONE STAR AVIATION CORP. Mansfield, Texas

TITLE Fan Failure Warning System Installation

SIZE	DRAWING NO.	REV
A	LS03-02070	A

SCALE NONE | COMP. FILE | SHEET 1 OF 1

DWG. NO. LS03-02070 | SH. 1 of 1 | REV. REV-A