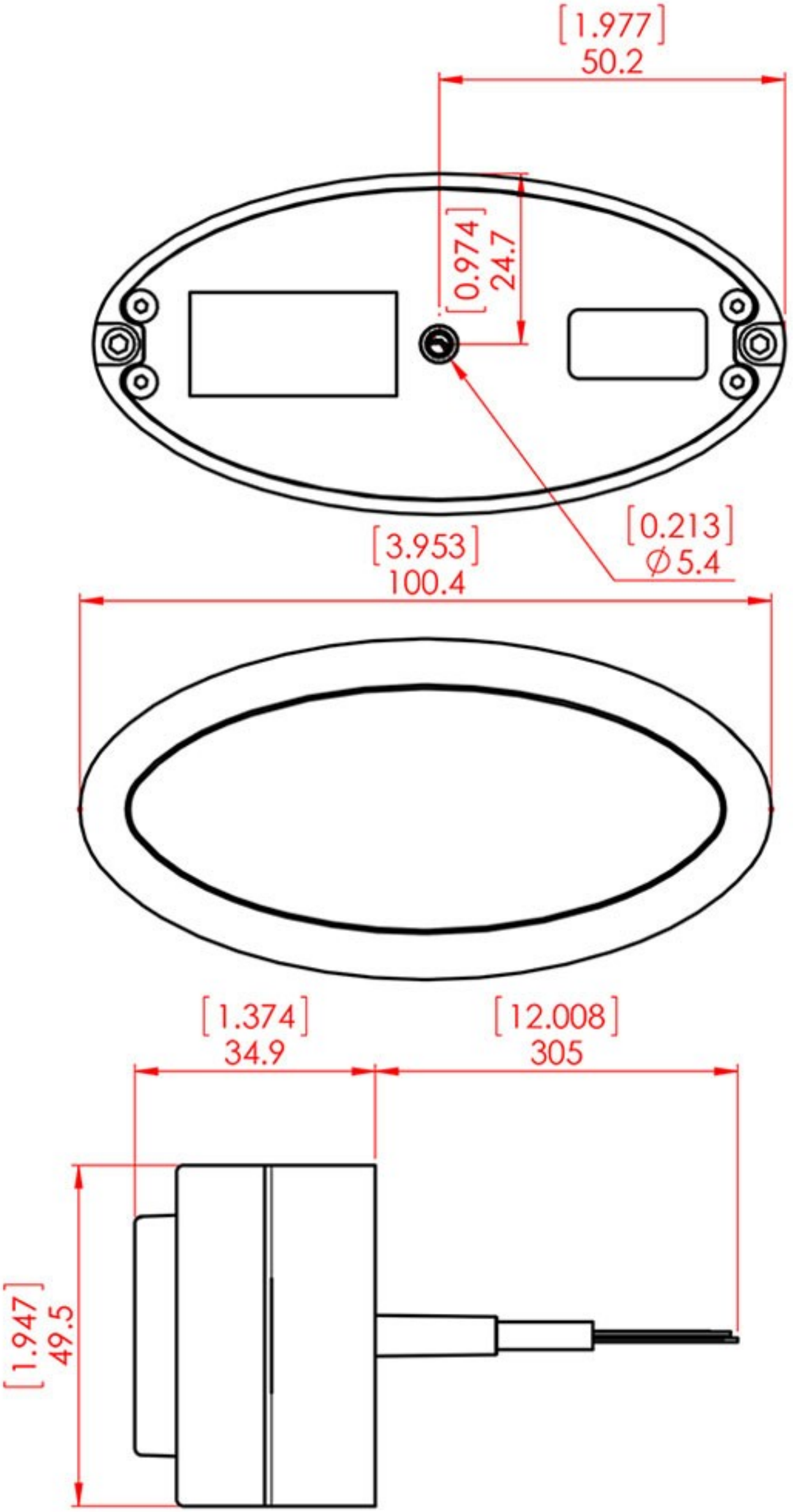
[1.977]
50.2
[0.974]
24.7
[0.213]
∅5.4
[3.953]
100.4
[1.374]
34.9
[12.008]
305
[1.947]
49.5