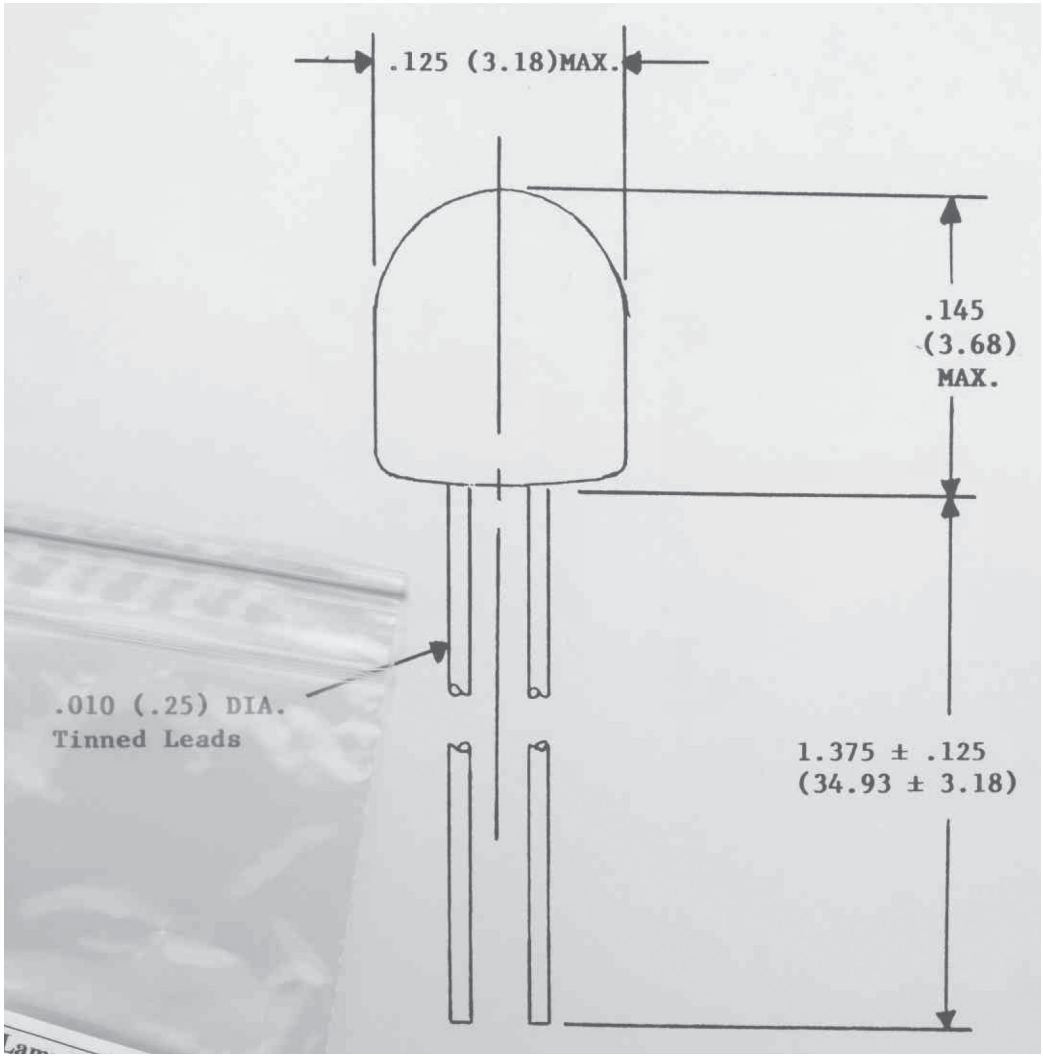
.125 (3.18)MAX.
.145
(3.68)
MAX.
.010 (.25) DIA.
Tinned Leads
1.375 ± .125
(34.93 ± 3.18)